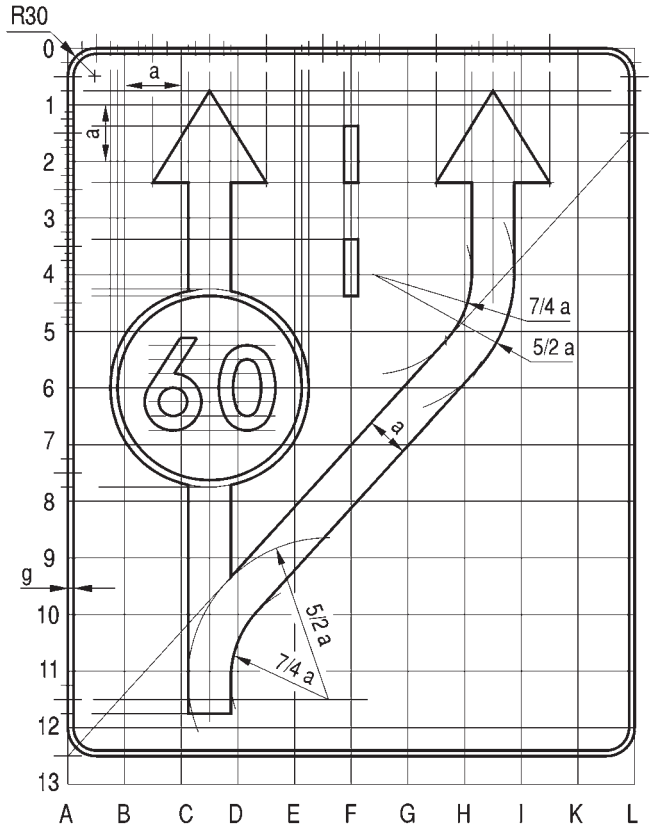
R30
a
a
7/4 a
5/2 a
a
5/2 a
7/4 a
g
0
1
2
3
4
5
6
7
8
9
10
11
12
13
A
B
C
D
E
F
G
H
I
K
L