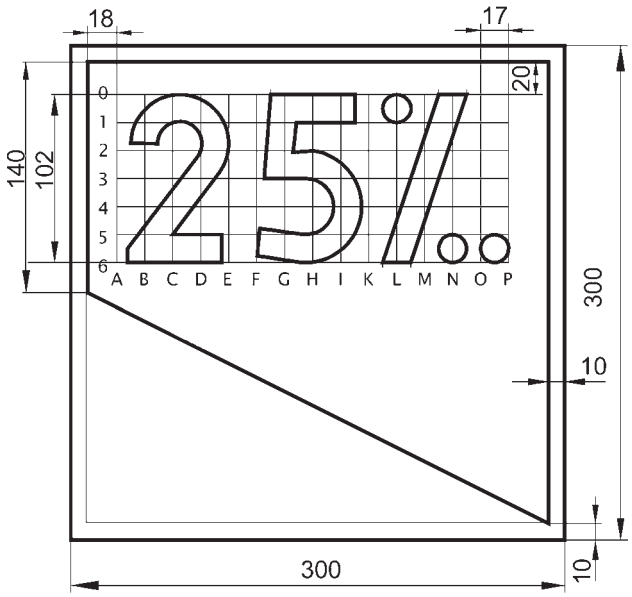
18
17
20
140
102
300
10
300
10
0
1
2
3
4
5
6
A B C D E F G H I K L M N O P